View Article Online / Journal Homepage / Table of Contents for this issue

Historical Perspectives

Towards a Definitive History of Optical Spectroscopy Part I. Simple prismatic spectra: Newton and his predecessors

D. Thorburn Burns
Department of Analytical Chemistry, The Queen's University of Belfast, Belfast BT9 5AG, UK

Published on 01 January 1987. Downloaded by Universite De Fribourg Suisse on 21/08/2015 09:58:13.

Review of the prism refraction studies made by Porta (1593), Descartes (1637), Kircher (1646), Marci (1648), de la Chambre (1650) and by Boyle (1664) demonstrates that Newton was not, as popularly held, the first to contrive or observe the solar spectrum. Attention is drawn to the significant influences of Descartes on Boyle and, of Boyle on Newton's spectral studies.

The erroneous view that Newton was the first to contrive or observe the solar spectrum by the dispersion of white light has been made, implied, or given pride of place by many authors.[1–9] This well established error of fact or emphasis most probably owes its continuance to Twymans's view[3] of Kayser's account of the history of spectral analysis,[10] "Kayser was my chief guide . . . the more I sought the more I was impressed by the thoroughness of his historical survey."[3] More careful reading of Kayser, however, shows that he was aware of earlier work by Marcus Marci of Kronland, published in 1648.[11] The origins of contrived spectra are much earlier as noted by Sabra[12] and by Henderson.[13] Man-made spectra have been known from at least the thirteenth century when experiments using globes of water were often used to imitate raindrops by those trying to explain the rainbow. For example, **Leonardo da Vinci**[14] wrote: ". . . if you place this glass full of water on the level of the window, so that the suns rays strike it on the opposite side, you will then see the aforesaid colours [of the rainbow] producing themselves, in the impression made by the solar rays which here penetrated through this glass of water, and terminated on the floor in a dark place at the front of the window; and since the eye is not employed we clearly can say with certainty that these colours do not derive in any way from the eye." Extensive studies on the transmission of ideas on the rainbow up to the seventeenth century have been made and reported by Crombie[15] and by Boyer.[16]

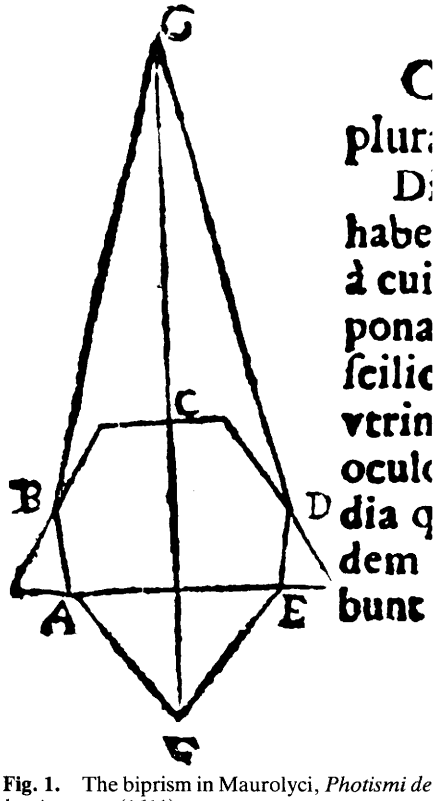

Fig. 1. The biprism in Maurolyci, *Photismi de lumine . . .*, (1611)

The first time the use of a prism was studied and recorded in a book of optics was, according to Ronchi,[17] in the book of **Maurolico**[18] published in 1611 (Fig. 1) possibly based upon the time the work was carried out to which he pays particular attention. Ascribing priority to the date work was carried out and not to the date of publication or date material was submitted for publication can cause problems. Maurolico's book was, as noted in the text, written in several parts at different times (1521, 1553 and 1554), added to (1555), edited and indexed later (1575), and finally published in 1611. None of Maurolico's prism diagrams indicate dispersion or the formation of a spectrum. Studies of refraction of light had been published earlier than 1611 by Alhazeni (1572),[19] Della Porta (1593)[20] and by Kepler (1604)[21] but only **Della Porta** showed a prism and noted colour formation. Della Porta's diagram of the prism and the ray paths is highly speculative (Fig. 2). It is difficult to understand why the prism diagram is so poor in view of the detail and accuracy of knowledge of optics, shown in other sections of the text. The first reasonably accurate diagram of the formation of a spectrum appears to be that of Descartes.

Descartes (1637) is very important in his own right and for his influence on later workers, such as Boyle and Newton. In an appendix to his *Discours de la Methode*,[22,23] *Dioptric*, he formulated the hitherto elusive law of refraction, independently it is considered of Snell.[12] In another appendix, *Météores*, he gave a diagram (Fig. 3) showing rays of the sun impinging on a glass prism or triangle with the refracted rays forming a rainbowed-hued patch on cloth or white paper placed on a vertical wall. The green, blue and violet colours were seen towards H, the red, orange and yellow towards F, widening the aperture DE destroyed the colours near G. Descartes' theory of colour and refraction was complicated and corpuscularian[12]: the speed of rotation of light particles varied with colour, light had speed and a "determination to move in a

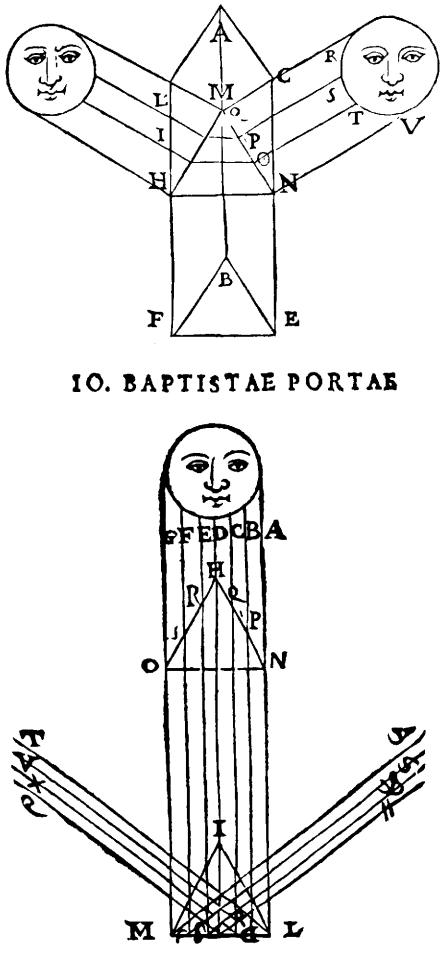

Fig. 2. Triangular prism, the sun and colours, in *De Refractione*, Portae (1593)

View Article Online

Published on 01 January 1987. Downloaded by Universite De Fribourg Suisse on 21/08/2015 09:58:13.

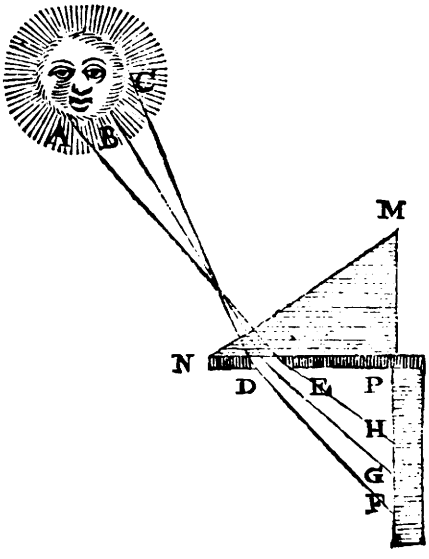

Fig. 3. Refraction and the formation of colours in Descartes, *Dioptrique* (1637)

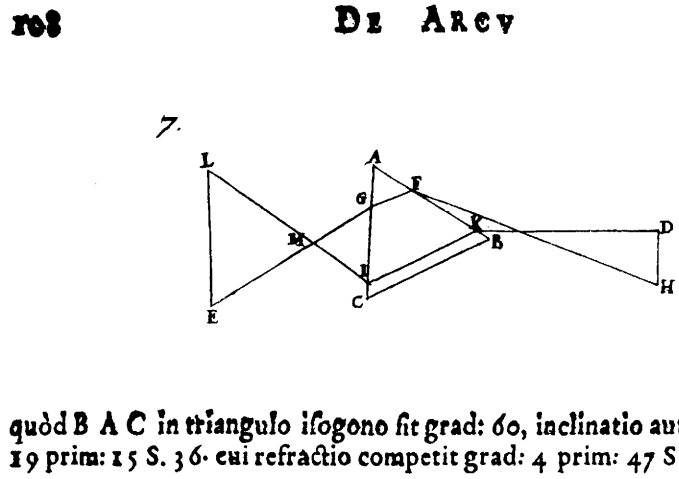

Fig. 5. Production of colours by refraction and difference in path length in Marci, *Thaumantis* (1648)

particular direction," which changed upon refraction.

The Jesuit **Kircher**'s 44 books and more than 2000 extant letters attest to his extraordinary variety of interests and intellectual endowment. He sought to disseminate the knowledge at his disposal, his printed works, comprehensive and illustrative, became popular. In *Ars Magna Lucis et Umbrae*[24] he argued that light was connected to the heavens by an unknown chain but behaved like magnets. He gave an illustration of a triangular prism and the separation of light into colours, shown in Fig. 4.

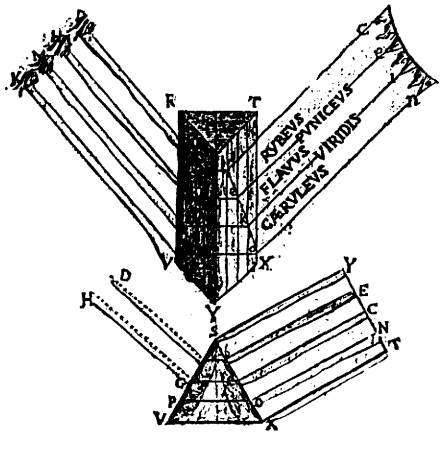

Fig. 4. Refraction and the formation of colours in Kircher, *Ars Magna Lucis* . . ., (1646, illustration taken from Second Edition 1671)

Marcus **Marci** of Kronland in Bohemia, a court physician in Prague described the spectral colours obtained by refraction through a triangular prism[11] and the persistance of colours, once separated, in subsequent refractions but did not mention the reconstitution of the spectrum into white light. He believed that the different colours to result from slightly differing angles of incidence at the first refraction which caused differing path lengths in the refracting medium. Thus in the drawing shown in Fig. 5 the small difference in the angles DKB and HFK (0.5° due to the size of the sun's disc) gives a shorter path length, FG, for the purple light appearing at E, and a longer one, KI, for the red light appearing at L. Both refractions were stated to be essential to produce colour. Marci is commemorated in a medal of the Czechoslovak Spectroscopic Society,[25] as was recently drawn attention to by Ure.[26]

M. C. **de la Chambre** (1650) was another court physician interested in the production of colours by refraction.[27] Like Marci he thought that the path length was important but that interaction between the refracted and internally reflected rays was necessary, as shown in Fig. 6. "The reflected rays mixing with the luminous mass traversing the triangle infect it with their colours." He attempted, not very convincingly, to explain how the red rays emerged nearest the prism apex where the opacity was least, red being the brighest colour while green and purple rays emerged in order, lower down the prism face.

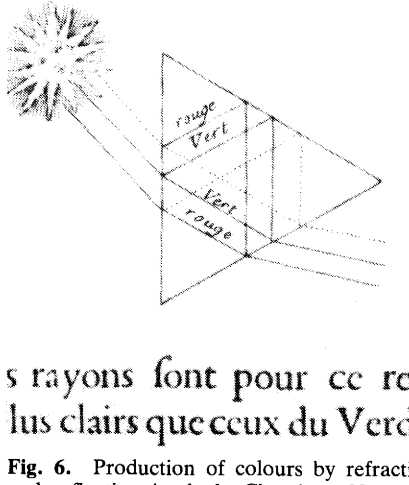

Fig. 6. Production of colours by refraction and reflection in de la Chambre, *Nouvelles Observations* . . . *sur l'Iris* (1650)

Boyle's (1664) contributions to optics and the study of colour were important in themselves at the time and for their influence on Newton, yet were overlooked by Ronchi[17] and by Henderson.[13] Boyle wrote in *Colours*[28,30] "The Triangular Prismatical Glass being the Instrument upon whose Effects we may the most Commodiously speculate the Nature of Emphatical Colours, (and perhaps that of Others too;) we thought it useful to observe the several Reflections and Refractions which the Incident Beams of Light suffer in Rebounding and Passing through it . . ."[30a] His diagram, Fig. 7, shows a pleasing precision as compared with the earlier representations. Boyle also described the effect of a double convex lens and a concave mirror to recombine the spectrum into white light and colour mixing using two prisms but did not venture a theoretical explanation. "But upon this we must not now stay to Speculate."[30b] From *Colours* and later works it is clear that Boyle regarded light as small corpuscules or *globuli* but was not sure as to the correct description,[30c] "in order to such an undertaking (perfect account of the theory of Vision and Colour) I would first Know what Light is, and if it be a Body (as a Body or the motion of a Body it seems to be) what Kind of Corpuscules for Size and Shape it consists of, with what Swiftness they move Forwards, and Whirl about their own Centres. Then I would Know the Nature of Refraction, which I take to be one of the Abstrusest things (not to explicate Plausibly but to explicate Satisfactorily) that I here meet with in Physicks; . . ." The influence of earlier works on Boyle is far from clear. Boyle wrote in *Physiological Essays*[31,32] "For . . . I have purposely refrained, though not altogether from consulting about a few particulars, yet from seriously and orderly reading over

View Article Online

Published on 01 January 1987. Downloaded by Universite De Fribourg Suisse on 21/08/2015 09:58:13.

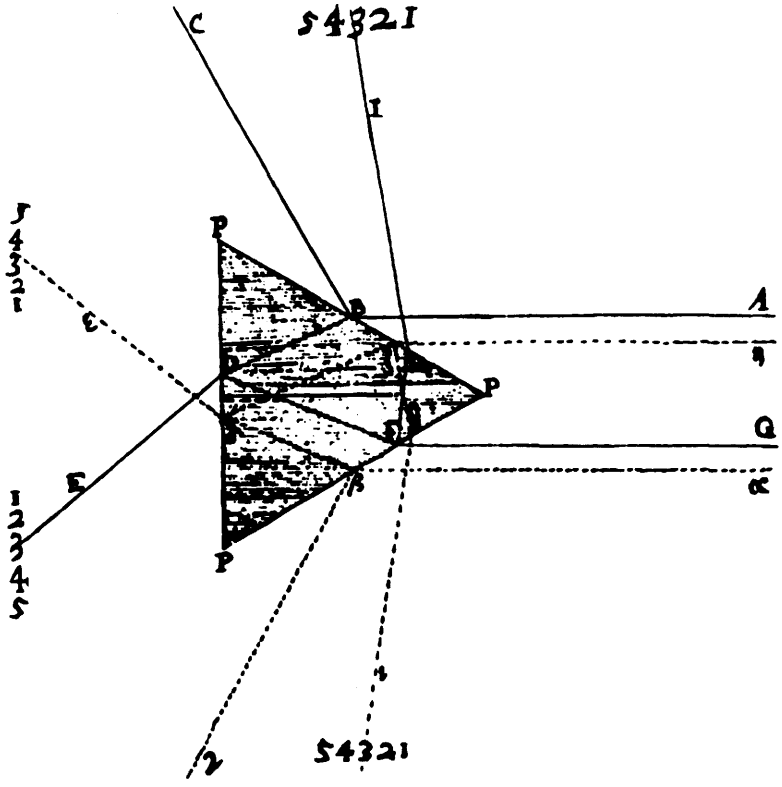

The Explication of the Scheme.

P P P. An Æquilaterotriangular Cryſtalline Priſm, one of whoſe edges *P.* is placed directly towards the Sun.

A B & *α β* Two rays from the Sun falling on the Priſm at *B β.* and thence partly reflected towards *C* & *γ.* and partly refracted towards *D* & *δ.*

B C & *β γ.* Thoſe reflected Rays.

B D & *β δ.* Thoſe refracted Rays which are partly refracted towards *E* & *ε.* and there paint an Iris 1 2 3 4 5. denoting the five conſecutions of colours Red, Yellow, Green, Blew, and Purple; and are partly reflected towards *F* & *ζ.*

D F & *δ ζ.* Thoſe Reflected Rays which are partly refracted towards *G* & *η.* colourleſs, and partly reflected, towards *H* & *θ.*

F H & *ζ θ.* Thoſe reflected Rays which are refracted towards *I* & *ι.* and there paint an other fainter Iris, the colours of which are contrary to the former 5 4 3 2 1. ſignifying Purple, Blew, Green, Yellow, Red, ſo that the Priſm in this poſture exhibits four Rainbows.

Fig. 7. Robert Boyle's diagram of the sun's spectrum in *Colours* (1664)

their excellent (though disagreeing) books . . . that I might not be prepossessed with any theory or particulars."[32a] The books specifically listed were Gessendus' *Sytagma,* Descartes' *Principles of Philofophy* and Bacon's *Novum Organum.* In the *Sceptical Chemist*[33] he states ". . . I, who had the good fortune to learn the operations [chemistry] from illiterate persons, upon whose credit I was not tempted to take up any opinion . . ."[34a] Boas[35] is of the opinion that these statements should not be taken at face value for in other places Boyle indicates he was proud to be well read, his guarded approach avoided much controversy. Boyle frequently gave credit and often references in almost the modern style and it is quite clear he had read the work of Descartes and of Kircher carefully as his citations and references[36] to Descartes exceed 60 and those to Kircher number about 20, indeed in *Excellency of Theology*[37,38] Boyle talks of "*Des Cartes's* excellent Diopticks."[38a]

F. **Grimaldi** (1665) was one of the many Jesuit experimental physicians. His illustration of refraction by a prism[39] (Fig. 8) clearly shows increased dispersion upon each passage of a beam through the prism. Grimaldi favoured a fluid nature for light. His primary contribution was the discovery of optical diffraction when the demonstrated coloured fringes at the edges of shadows from a narrow rod and other objects which extended far beyond what rectilinear projection would have predicted.

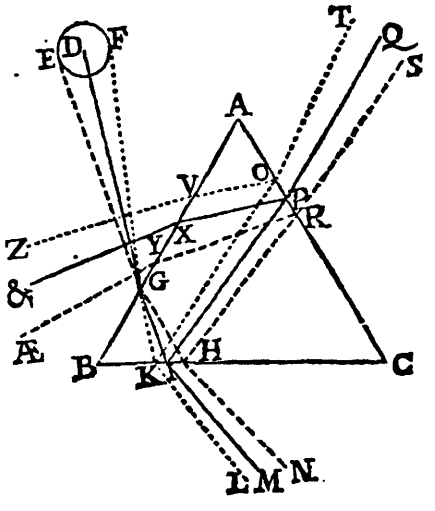

Fig. 8. Grimaldi's representation of prism, refraction and dispersion from *De Lumine* (1665)

Newton began his prism spectra studies in 1666 and six years elapsed before the first publication the now famous *Phil. Trans.* paper in 1672.[40] It is clear from his wording "I procured me a triangular glass, to try therewith the celebrated *Phaenomena* of *Colours*"[40] that he was aware of earlier work but unlike Boyle, Newton was sparing with references and normally only referred to other work when developing counter arguments to experiments or conclusions. The key spectral experiments including the use of a double concave lens (see Fig. 9) and a concave mirror to recombine the colours to white were an unreferenced repeat of Boyles'. The powerful influence of Boyle on Newton's spectral studies is based on Hall's examination of one of Newton's early scientific note books which contain detailed notes from Boyle's book *Colours*[28] and other of his works.[41] Newton also studied Descartes and Hooke.[42] His acquisition of prisms, their quality and the sequence of the experiments which were carried out and reported over a long

View Article Online

Published on 01 January 1987. Downloaded by Universite De Fribourg Suisse on 21/08/2015 09:58:13.

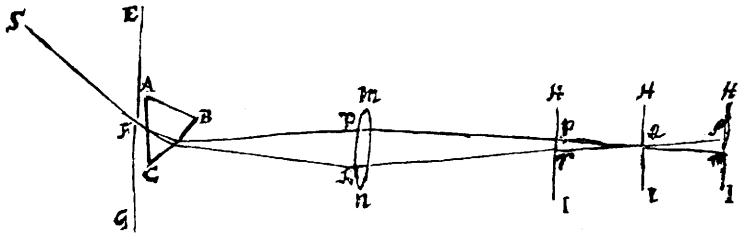

Fig. 9. Newton's analysis and synthesis of white light, from *Phil. Trans.* (1672)

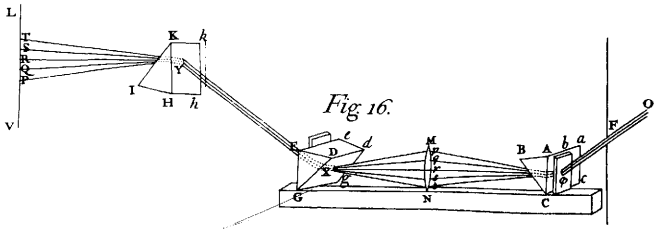

Fig. 10. Newton's analysis and synthesis of white light in *Opticks* (1704)

period of time have been analysed by Mills.[43] There was a 32 year gap between Newton's first and second publication, *Opticks,*[44] although the results of his studies were given in his Cambridge lectures on optics delivered from 1669,[42,45] these were not published until 1729,[46] based upon the second draft manuscript of about 1671. Newton's model of light was corpuscular, although he found it necessary to invoke waves in the ether to explain the "Newton's Rings" phenomena. He worried about explanation of the diffraction phenomena, described by Grimaldi, and wrote to Boyle, February 28th 1679,[47] discussing a possible explanation based upon variable density of the aether within and without solid bodies. Newton was the first to use the term spectrum[48] (Latin for appearance) for the elongated coloured image whereas Boyle uses the term iris[49] (Greek for rainbow), both noted five main colours, purple, blue, green, yellow and red. In addition, Newton reported orange and indigo, based upon observations of an assistant "whose eyes were more critical for distinguishing colours than mine."[44a] These two colours he then promoted to fundamental divisions, by analogy with the notes in a musical scale. Newton's discussion on the nature of white light, colour mixing complimentary colours were more detailed and the observations more refined in *Opticks* (compare Fig. 9 with Fig. 10) but they were not totally original, hence it cannot be held that Newton was the first to contrive or observe the spectrum.

The author is grateful to the Library of the Wellcome Institute for the History of Medicine for study facilities and for permission to reproduce photographs (Figs. 1 and 2), to Professor E. Roth for assistance and to the Bibliothèque Centrale Du Museum National D'Histoire Naturelle, Paris, for the photograph for Fig. 6, and to his long-time friend and colleague Dr. M. Malát, Charles University, Prague, for obtaining the photograph of Marci's text, Fig. 5.

References

1. Roscoe, H. E., "Spectrum Analysis," Macmillan, London, 1869.
2. Judd Lewis, S., "Spectroscopy in Science and Industry," Blackie, Glasgow, 1933.
3. Twyman, F., "Metal Spectroscopy," C. Griffen, London, 1951.
4. Szabadváry, F., "History of Analytical Chemistry," Pergamon Press, Oxford, 1966.
5. Thorburn Burns, D., *Proc. Anal. Div. Chem. Soc.*, 1975, **11**, 155.
6. Latinen, H. E., and Ewing, G. W., "A History of Analytical Chemistry," Division of Analytical Chemistry, American Chemical Society, Washington, DC, 1977.
7. Szabadváry, F., and Robinson, A., "The History of Analytical Chemistry," *in* Svehla, G., *Editor,* "Comprehensive Analytical Chemistry," Volume X, Elsevier, Amsterdam, 1980.
8. Campbell, W. A., "Analytical Chemistry," *in* Russell, C. A., *Editor,* "Recent Developments in the History of Chemistry," Royal Society of Chemistry, London, 1985.
9. Bennett, J. A., "The Celebrated Phaenomena of Colours: the early history of the spectroscope," Whipple Museum, Cambridge, 1984.
10. Kayser, H., "Handbuch der Spectroscopie," Volume I, S. Hirzel, Leipzig, 1906.
11. Marci, J. M., "Thaumantis, Liber arca coelesti deque colorum . . .," Typis Academicis, Pragae, 1648.
12. Sabra, A. I., "Theories of light from Descartes to Newton," Oldbourne, London, 1967.
13. Henderson, S. T., "Daylight and its spectrum," Second Edition, Adam Hilger, Bristol, 1977.
14. da Vinci, L., *Translated by* MacCurdy, E., "The Notebooks of Leonardo da Vinci," Volume 2, Jonathan Cape, London, 1956, p. 279.
15. Crombie, A. C., "Robert Grosseteste and the Origins of Experimental Science," Second Impression, Clarendon Press, Oxford, 1962, (first published 1953).
16. Boyer, C. B., "The Rainbow from Myth to Mathematics," T. Yoseloff, New York, 1959.
17. Ronchi, V., "The Nature of Light, an Historical Survey," Heinemann, London, 1970, (originally published in Italian as "Storia della Luci," 1939).
18. Maurolyci, F., "Photosmi de lumine et umbra . . .," T. Longi, Neopoli, 1611.
19. Alhazeni, *Translated by* Risnero, F., "Opicae," E. Episcopics & N. F. Haeredes, Basileae, 1572.
20. Baptistae, J. B., "De Refractione," J. Carlinum & A. Pacem, Neopoli, 1593.
21. Kepler, J., "Ad Vitellionen paralipmena . . .," C. Marnium & H. J. Aubrii, Francofurti, 1604.
22. Descartes, R., "Discours de la Methode . . .," J. Maire, Leiden, 1637.
23. Descartes, R., "Principia Philosophinae," ultima editio, 1677; "Specimena Philosophiae: seu Dissertatio de Methodo . . . Diotrice, et Meteora," 1677; "Passiones Animae," 1677, D. Elsevirium, Amstelodami. Issued as three works in one volume, used in this study.
24. Kircheri, A., "Ars Magna Lucis et Umbrae," L. Grignani for H. Scheus, Romae, 1646; Second Edition, J. Janssonium, Amstelodami, 1671.
25. Vobecky, M., *Editor,* "The Czechoslovak Spectroscopic Society by the Czechoslovak Academy of Sciences 1949–1984," Prague, 1984.
26. Ure, A. M., "The Origin of Spectra. Who was the first?", *J. Anal. At. Spectrom.*, 1986, **1**, 6.
27. de la Chambre, M. C., "Nouvelles Observations et Coniectures sur l'Iris," P. Rocolet, Paris, 1650.
28. Boyle, R., "Experiments and considerations touching colours . . .," H. Herringman, Anchor, New Exchange, London, 1664; reprinted by Johnson Reprint Corp., New York, 1964. (Second Edition, 1670.)
29. "The Works of the Honourable Robert Boyle. In six volumes to which is prefixed a Life of the Author, A New Edition," J. and E. Rivington *et al.*, London, 1772.
30. Ref. 29, Volume I, pp. 662–799; (a), p. 726; (b), p. 727; (c), p. 695.
31. Boyle, R., "Certain Physiological Essays, written at distant times and on several occasions," H. Herringman, London, 1661; Second Edition, 1669.
32. Ref. 29, Volume I, pp. 298–457; (a), p. 302.
33. Boyle, R., "The Sceptical Chemist . . .," J. Caldwell for J. Crooke, London, 1661; Second Edition, H. Hall, Oxford, for R. Davies and B. Took, London, 1680.
34. Ref. 29, Volume I, pp. 458–661; (a), p. 463.
35. Boas, M., "Robert Boyle and Seventeenth-century Chemistry," University Press, Cambridge, 1958.

View Article Online

Published on 01 January 1987. Downloaded by Universite De Fribourg Suisse on 21/08/2015 09:58:13.

36. Index to "Works" ref. 29 gives 31 entries for Descartes and 14 for Kircher, balance are in the text and unindexed.
37. Boyle, R., "The Excellency of Theology, compared with Natural Philosophy . . .," T. N. for H. Herringman, London, 1674.
38. Ref. 29, pp. 1–84; (a), p. 18.
39. Grimaldo, F. M., "De Lumine, Coloribus et Iride . . .," H. V. Benatij, Bononiae, 1665; reprinted by Dawson, London, 1966.
40. Newton, I., *Phil. Trans.*, 1672, **6**, 3075.
41. Hall, A. R., *Ann. Sc.*, 1955, **II**, 27.
42. Shapiro, A. E., *Editor,* "The Optical papers of Isaac Newton," Volume I, "The Optical Lectures 1670–1672," Cambridge University Press, Cambridge, 1984.
43. Mills, A. A., *Notes and Records, Roy. Soc.*, 1981, **36**, 13.
44. Newton, I., "Opticks . . .," S. Smith and B. Walford, London, 1704; Fourth Edition, W. Innys, London, 1730, was reprinted by Dover Publications, New York, 1952 and 1979; (a) reprint, p. 128.
45. Whiteside, D. T., *Editor*, "The Unpublished first version of Isaac Newton's Cambridge Lectures on Optics 1670–1672," Cambridge Library, Cambridge, 1973. (Facsimile reprint + commentary.)
46. Isaaci Newtoni, "Lectiones opticae, annis MDCLXIX MDCLXX MDCLXXI. In scholis publicis habitae . . .," G. Innys, Londoni, 1729.
47. Ref. 29, Volume I, *in* "Life," pp. cxii–cxvii.
48. Murray, J. A. H., *et al., Editors,* "A New English Dictionary on Historical Principles; . . .," Volume IX, p. 557, Clarendon Press, Oxford, 1919.
49. Murray, J. A. H., *et al., Editors*, "A New English Dictionary on Historical Principles; . . .," Volume V, p. 476, 1901.